On the Complexity of Decision Making in Possibilistic Decision Trees

Hélène Fargier
IRIT
118 route de Narbonne
31062 Toulouse, France
fargier@irit.fr

Nahla Ben Amor
LARODEC Laboratory
ISG, University of Tunis
Tunisia, 2000
nahla.benamor@gmx.fr

Wided Guezguez
LARODEC Laboratory
ISG, University of Tunis
Tunisia, 2000
widedguezguez@gmail.com

Abstract

When the information about uncertainty cannot be quantified in a simple, probabilistic way, the topic of possibilistic decision theory is often a natural one to consider. The development of possibilistic decision theory has lead to a series of possibilistic criteria, e.g pessimistic possibilistic qualitative utility, possibilistic likely dominance , binary possibilistic utility and possibilistic Choquet integrals. This paper focuses on sequential decision making in possibilistic decision trees. It proposes a complexity study of the problem of finding an optimal strategy depending on the monotonicity property of the optimization criteria which allows the application of dynamic programming that offers a polytime reduction of the decision problem. It also shows that possibilistic Choquet integrals do not satisfy this property, and that in this case the optimization problem is $NP-hard$.

1 Introduction

For several years, there has been a growing interest in the Artificial Intelligence community towards the foundations and computational methods of decision making under uncertainty. This is especially relevant for applications to sequential decision making under uncertainty, where a suitable strategy is to be found, that associate a decision to each state of the world. Several formalisms can be used for sequential decision problems, such as decision trees, influence diagrams or Markov decision processes. A decision tree is an explicit representation of a sequential decision problem, while influence diagrams or Markov decision processes are compact representations. Even in the simple and explicit case of decision trees, the set of potential strategies increases exponentially with the tree size.

A popular criterion to compare decisions under risk is the expected utility (EU) model axiomatized by von Neumann and Morgenstern [12]. This model relies on a probabilistic representation of uncertainty: an elementary decision (i.e. a one-step decision problem) is modeled by a probabilistic lottery over its possible outcomes. The preferences of the decision maker are supposed to be captured by a utility function assigning a numerical value to each outcome. The evaluation of a lottery is then performed through the computation of its expected utility (the greater is the better). In sequential decision making, each possible strategy is viewed as compound lottery. It can be reduced to an equivalent simple lottery, and thus compared to the others according to its expected utility. Although the high combinatorial nature of the set of possible strategies, the selection of an optimal strategy can be performed in polynomial time (polytime) with the size of the decision tree: the EU model indeed satisfies a property of *monotonicity* that guarantees completeness of a polytime algorithm of dynamic programming.

When the information about uncertainty cannot be quantified in a simple, probabilistic way the topic of possibilistic decision theory is often a natural one to consider [1, 2, 4]. Giving up the probabilistic quantification of uncertainty has led to give up the EU criterion as well. The development of possibilistic decision theory has lead a series of possibilistic counterparts of the EU criterion. [15] for instance advocates the use of possibilistic Choquet integrals, which relies on a numerical interpretation of both possibility and utility degrees. On the contrary, [4] have studied the case of a qualitative interpretation and propose two criteria based on possibility theory, an optimistic and a pessimistic one (denoted by U_{opt} and U_{pes}), whose definitions only require a finite ordinal, non compensatory, scale for evaluating both utility and plausibility.

The axiomatization of U_{opt} and U_{pes} yielded the development of sophisticated qualitative models for sequential decision making, e.g. possibilistic Markov decision

processes [16, 17], possibilistic ordinal decision trees [5] and even possibilistic ordinal influence diagrams. One of the most interesting properties of this qualitative model is indeed that it obeys a weak form of the monotonicity property. As a consequence, dynamic programming may be used and a strategy optimal with respect to U_{pes} or U_{opt} can be built in polytime.

On the contrary general Choquet integrals are incompatible with dynamic programming. Worst, the problem of determining a strategy optimal with respect to Choquet integrals is NP-Hard in the general case [10]. We show in the present paper that the problem of determining a strategy optimal with respect to a *possibilistic Choquet integrals* is NP-Hard as well. More generally, we propose a study of the complexity of the problem of finding an optimal strategy for possibilistic decision trees: which criteria obey the monotonicity property (and then may be solved in polytime thanks to dynamic programming) and which ones lead to NP-Hard problems?

This paper is organized as follows: Section 2 presents a refresher on possibilistic decision making under uncertainty and especially a survey on most common possibilistic decision criteria. Section 3 details possibilistic decision trees. Section 4 is devoted to the complexity study regarding different decision criteria. Finally, Section 5 presents an extension to order of magnitude expected utility. Proofs are omitted for space reasons but are available at `ftp://ftp.irit.fr/IRIT/ADRIA/PapersFargier/uai11.pdf`.

2 Background

2.1 Possibilitic lotteries

The basic building block in possibility theory is the notion of *possibility distribution* [3]. Let $x_1, \ldots, x_n$ be a set of state variables whose value are ill-known, $D_1 \ldots D_n$ their respective domains and denote $\Omega = D_1 \times \cdots \times D_n$ the joint domain of $x_1, \ldots, x_n$. Vectors $\omega \in \Omega$ are often called realizations or simply "states" (of the world). The agent's knowledge about the value of x_i's is by a possibility distribution $\pi : \Omega \to [0, 1]$; $\pi(\omega) = 1$ means that ω is totally possible and $\pi(\omega) = 0$ means that ω is an impossible state. It is generally assumed that there exist at least one state ω which is totally possible, i.e. that π is *normalized*.

Extreme cases of knowledge are presented by *complete knowledge* i.e. $\exists \omega_0$ s.t. $\pi(\omega_0) = 1$ and $\forall \omega \neq \omega_0, \pi(\omega) = 0$ and *total ignorance* i.e. $\forall \omega \in \Omega, \pi(\omega) = 1$ (all values in Ω are possible). From π, one can compute the possibility $\Pi(A)$ and necessity $N(A)$ of an event $A \subseteq \Omega$:

$$\Pi(A) = \sup_{\omega \in A} \pi(\omega). \tag{1}$$

$$N(A) = 1 - \Pi(\bar{A}) = 1 - \sup_{\omega \notin A} \pi(\omega). \tag{2}$$

$\Pi(A)$ evaluates to which extend A is consistent with the knowledge represented by π; $N(A)$ corresponds to the extent to which $\neg A$ is impossible: it evaluates at which level A is implied by the knowledge.

In possibility theory, conditioning is defined by the following counterpart of the Bayesian rule:

$$\forall \omega,\ \pi(\omega) = \min(\pi(\omega \mid \psi), \Pi(\psi)). \tag{3}$$

In this equation, $\pi(\omega \mid \psi)$ and $\Pi(\psi)$ are combined according to a min operation, according to the *ordinal* interpretation of the possibilistic scale[1]. The following min-based definition of the conditioning corresponds to the least specific solution of (3) (see [9]):

$$\pi(\omega|\psi) = \begin{cases} 1 & if\ \pi(\omega) = \Pi(\psi)\ \ and\ \ \omega \in \psi \\ \pi(\omega) & if\ \pi(\omega) < \Pi(\psi)\ \ and\ \ \omega \in \psi \\ 0 & otherwise \end{cases} \tag{4}$$

Following [2, 4], a decision can be seen as a possibility distribution over its outcomes. In a single stage

problem, a utility function maps each outcome to a utility value in a totally ordered set $U = \{u_1, \ldots, u_n\}$ (we assume without loss of generality that $u_1 \leq \cdots \leq u_n$). This function models the attractiveness of each outcome for the decision maker. An act can then be represented by a possibility distribution on U, called a (simple) *possibilistic lottery*, and denoted by $\langle \lambda_1/u_1, \ldots, \lambda_n/u_n \rangle$: $\lambda_i = \pi(u_i)$ is the possibility that the decision leads to an outcome of utility u_i.

In the following, $\mathcal{L}$ denotes the set of simple lotteries (i.e. the set of possibility distributions over U). A *possibilistic compound lottery* $\langle \lambda_1/L_1, \ldots, \lambda_m/L_m \rangle$ (also denoted by $(\lambda_1 \wedge L_1 \vee \cdots \vee \lambda_m \wedge L_m)$) is a possibility distribution over a subset of $\mathcal{L}$. The possibility $\pi_{i,j}$ of getting a utility degree $u_j \in U$ from one of its sub−lotteries L_i depends on the possibility λ_i of getting L_i and on the conditional possibility $\lambda_j^i = \pi(u_j \mid L_i)$ of getting u_j from L_i i.e. $\pi_{i,j} = \min(\lambda_j, \lambda_j^i)$ by equation (3). Hence, the possibility of getting u_j from a compound lottery $\langle \lambda_1/L_1, \ldots, \lambda_m/L_m \rangle$ is the *max*, over all L_i, of $\pi_{i,j}$. Thus, [2, 4] have proposed to reduce $(\lambda_1/L_1, \ldots, \lambda_m/L_m)$ into a simple lottery, denoted by $Reduction(\langle \lambda_1/L_1, \ldots, \lambda_m/L_m \rangle)$, that is considered as equivalent to the compound one:

$$\begin{aligned} &Reduction(\langle \lambda_1/L_1, \ldots, \lambda_m/L_m \rangle) \\ &= \langle \max_{j=1..m} \min(\lambda_j, \lambda_1^j)/u_1, \ldots, \max_{j=1..m} min(\lambda_j, \lambda_n^j)/u_n \rangle. \end{aligned} \tag{5}$$

[1] The other, *numerical* interpretation of possibility theory is the use a product instead of a min operation, but this is out the scope of the present study.

Obviously, the reduction of a simple lottery is the simple lottery itself. Since min and max are polynomial operations, the reduction of a compound lottery is polynomial in the size of the compound lottery [2]. We review in the following the different criteria that have been proposed to evaluate and/or compare (simple) lotteries; thanks to the notion of reduction, they also apply to compound lotteries: to evaluate/compare compound lotteries, simply reduce each to an equivalent simple one; then use one of the criteria proposed for the evaluation/the comparison of simple lotteries. Formally, any comparison criterion O, i.e. any preference order $\geq_O$ defined on simple lotteries can be extended to compound lotteries as follows:

$$L \geq_O L' \iff Reduction(L) \geq_O Reduction(L'). \quad (6)$$

2.2 Possibilistic qualitative utilities (U_{pes}, U_{opt}, PU)

Under the assumption that the utility scale and the possibility scale are commensurate and purely ordinal, [4] have proposed the following qualitative pessimistic and optimistic utility degrees for evaluating any simple lottery $L = \langle \lambda_1/u_1, \ldots, \lambda_n/u_n \rangle$ (possibly issued from the reduction of a compound lottery):

$$U_{pes}(L) = \max_{i=1..n} \min(u_i, N(L \geq u_i)). \quad (7)$$

$$U_{opt}(L) = \max_{i=1..n} \min(u_i, \Pi(L \geq u_i)). \quad (8)$$

where $N(L \geq u_i) = 1 - \Pi(L < u_i) = 1 - \max_{j=1,i-1} \lambda_j$ and $\Pi(L \geq u_i) = \max_{j=1..n} \lambda_j$ are the necessity and possibility degree that L reaches at least the utility value u_i. U_{pes} generalizes the *Wald criterion* and estimates to what extend it is certain (i.e. necessary according to measure N) that L reaches a good utility. Its optimistic counterpart, U_{opt}, estimates to what extend it is possible that L reaches a good utility. Because decision makers are rather cautious than adventurous, the former is generally preferred to the latter.

Claiming that the lotteries that realize in the best prize or in the worst prize play an important role in decision making, Giang and Shenoy [7] have proposed a bipolar model in which the utility of an outcome is a pair $u = \langle \overline{u}, \underline{u} \rangle$ where $max(\overline{u}, \underline{u}) = 1$: the utility is binary in this sense that $\overline{u}$ is interpreted as the possibility of getting the ideal, good reward (denoted $\top$) and $\underline{u}$ is interpreted as the possibility of getting the anti ideal, bad reward (denoted $\bot$).

Because of the normalization constraint $max(\overline{u}, \underline{u}) = 1$, the set $U = \{\langle \overline{u}, \underline{u} \rangle \in [0,1]^2, max(\lambda, \mu) = 1\}$ is totally ordered:

$$\langle \overline{u}, \underline{u} \rangle \succeq_b \langle \overline{v}, \underline{v} \rangle \iff \begin{cases} \overline{u} = \overline{v} = 1 \text{ and } \underline{u} \leq \underline{v} \\ \text{or} \\ \overline{u} \geq \overline{v} \text{ and } \underline{u} = \underline{v} = 1 \\ \text{or} \\ \overline{u} = \underline{v} = 1 \text{ and } \overline{v} < 1 \end{cases} \quad (9)$$

Each $u_i = \langle \overline{u_i}, \underline{u_i} \rangle$ in the utility scale is thus understood as a small lottery $\langle \overline{u_i}/\top, \underline{u_i}/\bot \rangle$. A lottery $\langle \lambda_1/u_1, \ldots, \lambda_n/u_n \rangle$ can be viewed as a compound lottery, and its PU utility is computed by reduction:

$$\begin{aligned} & PU(\langle \lambda_1/u_1, \ldots, \lambda_n/u_n \rangle) \\ & = Reduction(\lambda_1/\langle \overline{u_1}/\top, \underline{u_1}/\bot \rangle, \ldots, \lambda_n \wedge \langle \overline{u_n}/\top, \underline{u_n}/\bot \rangle) \\ & = \langle \max_{j=1..n} (\min(\lambda_j, \overline{u_j}))/\top, \max_{j=1..n} (\min(\lambda_j, \underline{u_j}))/\bot \rangle \end{aligned} \quad (10)$$

We thus get, for any lottery L a binary utility $PU(L) = \langle \overline{u}, \underline{u} \rangle$ in U. Lotteries can then be compared according to Equation (9):

$$L \geq_{PU} L' \iff Reduction(L) \succeq_b Reduction(L'). \quad (11)$$

In [8] Giang and Shenoy show that the order induced by PU collapse with the one induced by U_{opt} whenever for any lottery, the possibility $\underline{u}$ of getting the worst utility is equal to 1 (any "compound" lottery $\lambda_1/\langle 0, \alpha_1 \rangle, \ldots, \lambda_n/\langle 0, \alpha_n \rangle$ reduces to the lottery $\langle 1, \max_{i=1..n} min(\lambda_i, \alpha_i) \rangle$: $\max_{i=1..n} min(\lambda_i, \alpha_i)$ is precisely the optimistic utility value). In the same way, Giang and Shenoy have shown that the order induced on the lotteries by PU collapse with the one induced by U_{pes} as soon as for any lottery, the possibility $\overline{u}$ of getting the best utility is equal to 1. We shall thus say that PU captures U_{opt} and U_{pes} as particular cases.

2.3 Possibilistic likely dominance ($LN, L\Pi$)

When the scales evaluating the utility and the possibility of the outcomes are not commensurate, [1, 6] propose to prefer, among two possibilistic decisions, the one that is more likely to overtake the other. Such a rule does not assign a global utility degree to the decisions, but draws a pairwise comparison. Although designed on a Savage-like framework rather than on lotteries, it can be translated on lotteries. This rule states that given two lotteries $L_1 = \langle \lambda_1^1/u_1^1, \ldots, \lambda_n^1/u_n^1 \rangle$ and $L_2 = \langle \lambda_1^2/u_1^2, \ldots, \lambda_n^2/u_n^2 >$, L_1 is as least as good as L_2 as soon as the likelihood (here, the necessity or the possibility) of the event *the utility of L_1 is as least as good as the utility of L_2* is greater or equal to the likelihood of the event *the utility of L_2 is as least as good as the utility of L_1*. Formally:

$$L_1 \geq_{LN} L_2 \iff N(L_1 \geq L_2) \geq N(L_2 \geq L_1), \quad (12)$$

[2] The size of a simple lottery is the number of its outcomes; the size of a compound lottery is the sum of the sizes of its sub-lotteries plus the number of its sub-lotteries.

$$L_1 \geq_{L\Pi} L_2 \iff \Pi(L_1 \geq L_2) \geq \Pi(L_2 \geq L_1) \quad (13)$$

where $\Pi(L_1 \geq L_2) = \sup_{u_i^1, u_i^2 \text{ s.t. } u_i^1 \geq u_i^2} min(\lambda_i^1, \lambda_i^2)$ and $N(L_1 \geq L_2) = 1 - \sup_{u_i^1, u_i^2 \text{ s.t. } u_i^1 < u_i^2} min(\lambda_i^1, \lambda_i^2)$.

The preference order induced on the lotteries is not transitive, but only quasitransitive: obviously $L_1 >_N L_2$ and $L_2 >_{LN} L_3$ implies $L_1 >_{LN} L_3$ (resp. $L_1 >_{L\Pi} L_2$ and $L_2 >_{L\Pi} L_3$ implies $L_1 >_{L\Pi} L_3$) but it may happen that $L_1 \sim_{LN} L_2$, $L_2 \sim_{LN} L_3$ (resp. $L_1 \sim_{L\Pi} L_2$, $L_2 \sim_{L\Pi} L_3$) and $L_1 >_{LN} L_3$ (resp. $L_1 >_{L\Pi} L_3$).

2.4 Possibilistic Choquet integrals

In presence of heterogeneous information, i.e. when the knowledge about the state of the world is possibilistic while the utility degrees are numerical and compensatory the previous models cannot be applied anymore. Following [18] Choquet integrals appear as a right way to extend expected utility to non Bayesian models. Like the EU model, this model is a numerical, compensatory, way of aggregating uncertain utilities. But it does not necessarily resort on a Bayesian modeling of uncertain knowledge. Indeed, this approach allows the use of any monotonic set function [3], and thus of a necessity measure.

As the qualitative case, but assuming that the utility degrees have a richer, cardinal interpretation, the utility of L is given by a Choquet integrals:

$$Ch_\mu(L) = \Sigma_{i=1,n}(u_i - u_{i-1}) \ . \ \mu(L \geq u_i). \quad (14)$$

If μ is a probability measure then $Ch_\mu(L)$ is simply the expected utility of L. In the present paper, we are interested in studying the possibilistic framework for decision making: for cautious (resp. adventurous) decision makers, the capacity μ is the necessity measure N (resp. the possibility measure Π):

$$Ch_N(L) = \Sigma_{i=1,n}(u_i - u_{i-1}) \ . \ N(L \geq u_i). \quad (15)$$

$$Ch_\Pi(L) = \Sigma_{i=1,n}(u_i - u_{i-1}) \ . \ \Pi(L \geq u_i). \quad (16)$$

From Equations (5) and (15), it can be shown that:

Proposition 1.
Given a lottery $L = \langle \lambda_1/u_1, \ldots, \lambda_n/u_n \rangle$, an utility u_i s.t. $u_i \leq \max_{u_j \in L, \lambda_j > 0} u_j$ and a lottery $L' = \langle \lambda'_1/u_1, \ldots, \lambda'_n/u_n \rangle$ s.t. $\lambda'_i \geq \lambda_i$ and $\forall j \neq i, \lambda'_j = \lambda_j$, it holds that $Ch_N(L') \leq Ch_N(L)$.

This emphasizes the pessimistic character of Ch_N: adding to a lottery any consequence that is not better than its best one decreases its evaluation. As a consequence, we get the following result

[3]This kind of set function is often called capacity or fuzzy measure.

Proposition 2. *Let L_1, L_2 be two lotteries such that $\max_{u_i \in L_2, \lambda_i > 0} u_i \leq \max_{u_i \in L_1, \lambda_i > 0} u_i$. It holds that $Ch_N(Reduction(\langle 1/L_1, 1/L_2 \rangle)) \leq Ch_N(L_1)$.*

No such property holds for Ch_Π, as shown by the following counter example:

Counter Example 1. *Let $U = \{0, 1, \ldots, 9\}$, $L_1 = \langle 0.2/0, 1/2, 0.5/9 \rangle$, $L_2 = \langle 0.4/4, 1/7 \rangle$[4] and $L_3 = Reduction(\langle 1/L_1, 1/L_2 \rangle) = \langle 0.2/0, 1/2, 0.4/4, 1/7, 0.5/9 \rangle$. We can check that $Ch_\Pi(L_1) = 5.5$ and $Ch_\Pi(L_3) = 8$.*

3 Possibilistic decision trees

Decision trees are graphical representations of sequential decision problems under the assumption of full observability. A decision tree is a tree $\mathcal{T} = (\mathcal{N}, \mathcal{E})$ whose set of nodes, $\mathcal{N}$, contains three kinds of nodes:

- $\mathcal{D} = \{D_0, \ldots, D_m\}$ is the set of decision nodes (represented by rectangles). The labeling of the nodes is supposed to be in accordance with the temporal order i.e. if D_i is a descendant of D_j, then $i > j$. The root node of the tree is necessarily a decision node, denoted by D_0.
- $\mathcal{LN} = \{LN_1, \ldots, LN_k\}$ is the set of leaves, also called utility leaves: $\forall LN_i \in \mathcal{LN}$, $u(LN_i)$ is the utility of being eventually in node LN_i. For the sake of simplicity we assume that only leave nodes lead to utilities.
- $\mathcal{C} = \{C_1, \ldots, C_n\}$ is the set of chance nodes represented by circles. For any $X_i \in \mathcal{N}$, let $Succ(X_i) \subseteq \mathcal{N}$ be the set of its children. For any $D_i \in \mathcal{D}, Succ(D_i) \subseteq \mathcal{C}$: $Succ(D_i)$ is the set of actions that can be decided when D_i is observed. For any $C_i \in \mathcal{C}, Succ(C_i) \subseteq \mathcal{LN} \cup \mathcal{D}$: $Succ(C_i)$ is the set of outcomes of the action C_i - either a leaf node is observed, or a decision node is observed (and then a new action should be executed).

The size of $\mathcal{T}$ is its number of edges (the number of nodes is equal to the number of edges plus 1).

In classical, probabilistic, decision trees the uncertainty pertaining to the possible outcomes of each $C_i \in \mathcal{C}$, is represented by a conditional probability distribution p_i on $Succ(C_i)$, such that $\forall N \in Succ(C_i)$, $p_i(N) = P(N|path(C_i))$ where $path(C_i)$ denotes all the value assignments to chance and decision nodes on the path from the root node to C_i. In this work,

[4]For the sake of simplicity, we shall forget about the utility degrees that receive a possibility degree equal to 0 in a lottery, i.e. we write $\langle 0.2/0, 1/2, 0.5/9 \rangle$ instead of $\langle 0.2/0, 1/2, 0/3, 0/4, 0/5, 0/6, 0/7, 0/8, 0.5/9 \rangle$.

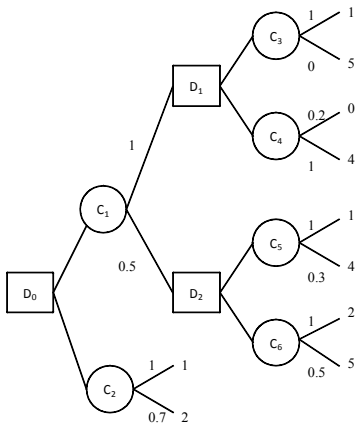

Figure 1: Example of possibilistic decision tree with $\mathcal{C} = \{C_1, C_2, C_3, C_4, C_5, C_6\}$, $\mathcal{D} = \{D_0, D_1, D_2\}$ and $\mathcal{LN} = U = \{0, 1, 2, 3, 4, 5\}$.

we obviously use a possibilistic labeling (see Figure 1). The difference with probabilistic decision trees is that the chance nodes are viewed as possibilistic lotteries. More precisely, for any $C_i \in \mathcal{C}$, the uncertainty pertaining to the more or less possible outcomes of each C_i is represented by a *conditional possibility distribution* π_i on $Succ(C_i)$, such that $\forall N \in Succ(C_i), \pi_i(N) = \Pi(N|path(C_i))$.

Solving the decision tree amounts at building a *strategy* that selects an action (i.e. a chance node) for each reachable decision node. Formally, we define a strategy as a function δ from $\mathcal{D}$ to $\mathcal{C} \cup \{\perp\}$. $\delta(D_i)$ is the action to be executed when a decision node D_i is observed. $\delta(D_i) = \perp$ means that no action has been selected for D_i (because either D_i cannot be reached or the strategy is partially defined). Admissible strategies must be:
- *sound*: $\forall D_i \in \mathcal{D}, \delta(D_i) \in Succ(D_i) \cup \{\perp\}$.
- *complete*: (i) $\delta(D_0) \neq \perp$ and (ii) $\forall D_i$ s.t. $\delta(D_i) \neq \perp, \forall N \in Succ(\delta(D_i))$, either $\delta(N) \neq \perp$ or $N \in \mathcal{LN}$.

Let Δ be the set of sound and complete strategies that can be built from $\mathcal{T}$. Any strategy in Δ can be viewed as a connected subtree of $\mathcal{T}$ whose edges are of the form $(D_i, \delta(D_i))$. The size of a strategy δ is the sum of its number of nodes and edges, it is obviously lower than the size of the decision tree.

Strategies can be evaluated and compared thanks to the notion of lottery reduction. Recall indeed that leaf nodes in $\mathcal{LN}$ are labeled with utility degrees. Then a chance node can be seen as a simple lottery (for the most right chance nodes) or as a compound lottery (for the inner chance nodes). Each strategy is a compound lottery and can be reduced to an equivalent simple one. Formally, the composition of lotteries will be applied from the leafs of the strategy to its root, according to the following recursive definition for any N_i in $\mathcal{N}$:

$$L(N_i, \delta) = \begin{cases} L(\delta(N_i), \delta) \;\; if \;\; N_i \in \mathcal{D} \\ Reduction(\langle \pi_i(X_j)/L(X_j, \delta)_{X_j \in Succ(N_i)} \rangle) \\ \;\; if \;\; N_i \in \mathcal{C} \\ \langle 1/u(N_i) \rangle \;\; if \;\; N_i \in \mathcal{LN} \end{cases} \tag{17}$$

Equation (17) is simply the adaptation to strategies of lottery reduction (Equation (5)). We can then compute $Reduction(\delta) = L(D_0, \delta)$: $Reduction(\delta)(u_i)$ is simply the possibility of getting utility u_i when δ is applied from D_0. Since, the operators max and min are polytime Equation (17) define a polytime computation of the reduced lottery.

Proposition 3. *For any strategy δ in Δ, an equivalent simple possibilistic lottery can be computed in polytime.*

We are now in position to compare strategies, and thus to define the notion of optimality. Let O be one of the criteria defined in Section 2 (i.e. depending on the application, $\geq_O$ is either $\geq_{L\Pi}$, or $\geq_{LN}$, or the order induced by U_{pes}, or by U_{opt}, etc.). A strategy $\delta \in \Delta$, is said to be optimal w.r.t. $\geq_O$ iff:

$$\forall \delta' \in \Delta, Reduction(\delta) \geq_O Reduction(\delta'). \tag{18}$$

Notice that this definition does not require the full transitivity (nor the completeness) of $\geq_O$ and is meaningful as soon as the strict part of $\geq_O$, $>_O$, is be transitive. This means that it is applicable to the preference relations that rely on the comparison of global utilities (qualitative utilities, binary utility, Choquet integrals) but also to $\geq_{LN}$ and $\geq_{L\Pi}$. We show in the following that the complexity of the problem of optimization depends on the criterion at work.

4 On the complexity of decision making in possibilistic decision trees

Finding optimal strategies via an exhaustive enumeration of Δ is a highly computational task. For instance, in a decision tree with n decision nodes and a branching factor equal to 2, the number of potential strategies is in $O(2^{\sqrt{n}})$. For standard probabilistic decision trees, where the goal is to maximize expected utility, an optimal strategy can be computed in polytime thanks to an algorithm of dynamic programming which builds the best strategy backwards, optimizing the decisions from the leaves of the tree to its root.

Regarding possibilistic decision trees, [5] shows that such a method can also be used to get a strategy max-

imizing U_{pes} and U_{opt}. The reason is that like EU, U_{pes} satisfies the key property of weak monotonicity. We formulate it for any criterion O over possibilistic lotteries: $\geq_O$ is said to be weakly monotonic iff whatever L, L' and L", whatever (α,β) such that $\max(\alpha, \beta) = 1$:

$$L \geq_O L' \Rightarrow (\alpha \wedge L) \vee (\beta \wedge L") \geq_O (\alpha \wedge L') \vee (\beta \wedge L"). \quad (19)$$

This property states that the combination of L (resp. L') with L", does not change the initial order induced by O between L and L' - this allows dynamic programming to decide in favor of L or L' before considering the compound decision. The principle of backwards reasoning procedure is depicted in a recursive manner by Algorithm 1 for any preference order $\geq_O$ among lotteries. When each chance node is reached, an optimal sub-strategy is built for each of its children - these sub-strategies are combined w.r.t. their possibility degrees, and the resulting compound strategy is reduced: we get an equivalent simple lottery, representing the current optimal sub-strategy. When a decision node X is reached, a decision Y^* leading to a sub-strategy optimal w.r.t. $\geq_O$ is selected among all the possible decisions $Y \in Succ(X)$, by comparing the simple lotteries equivalent to each sub strategies.

This procedure crosses each edge in the tree only once. When the comparison of simple lotteries by $\geq_O$ (Line (2)) and the reduction operation on a 2-level lottery (Line (1)) can be performed in polytime, its complexity is polynomial w.r.t. the size of the tree. Then:

Proposition 4. *If $\geq_O$ satisfies the monotonicity property, then Algorithm 1 computes a strategy optimal w.r.t. O in polytime.*

We will see in the following that, beyond U_{pes} and U_{opt} criteria, several other criteria satisfy the monotonicity property and that their optimization can be managed in polytime by dynamic programming. The possibilistic Choquet integrals, on the contrary, do not satisfy weak monotonicity; we will show that they lead to NP-Complete decision problems. Formally, for any of the optimization criteria of Sections 2.2 to 2.4, the corresponding decision problem can be defined as follows:

[DT-OPT-O] (Strategy optimization w.r.t. an optimization criterion O in possibilistic decision trees)
INSTANCE: A possibilistic decision tree $\mathcal{T}$, a level α.
QUESTION: Does there exist a strategy $\delta \in \Delta$ such as $Reduction(\delta) \geq_O \alpha$?

For instance DT-OPT-Ch_N corresponds to the optimization of the necessity-based Choquet integrals. DT-OPT-U_{pes} and DT-OPT-U_{opt} correspond to the optimization of the possibilistic qualitative utilities U_{pes} and U_{opt}, respectively.

Algorithm 1: Dynamic programming

Data: In: a node X, In/Out: a strategy δ
Result: A lottery L

```
begin
    for i ∈ {1,...,n} do L[u_i] ← 0
    if N ∈ LN then L[u(N)] ← 1
    if N ∈ C then
        % Reduce the compound lottery
        foreach Y ∈ Succ(N) do
            L_Y ← ProgDyn(Y, δ)
            for i ∈ {1,...,n} do
                L[u_i] ←
                max(L[u_i], min(π_N(Y), L_y[u_i])) (Line (1))
        if N ∈ D then
            % Choose the best decision
            Y* ← Succ(N).first
            foreach Y ∈ Succ(N) do
                L^Y ← ProgDyn(Y, δ)
                if L_Y >_O L_Y* then Y* ← Y (Line (2))
            δ(N) ← Y*
            L ← L_Y*
        return L
end
```

4.1 Possibilistic qualitative utilities (U_{pes}, U_{opt}, PU)

Possibilistic qualitative utilities U_{pes} and U_{opt} satisfy the weak monotonicity principle. Although not referring to a classical, real-valued utility scale, but to a 2 dimensional scale, this is also the case of PU.

Proposition 5. *$\geq_{U_{pes}}$, $\geq_{U_{opt}}$ and $\geq_{PU}$ satisfy the weak monotonicity property.*

As a consequence, dynamic programming applies to the optimization of these criteria in possibilistic decision trees. Although not explicitly proved in the literature, Proposition 5 is common knowledge in possibilistic decision theory. It is also known that dynamic programming applies to the optimization of U_{pes}, U_{opt} and PU in possibilistic Markov decision processes and thus to decision trees (see [5, 14, 17]).

Corollary 1. *DT-OPT-U_{pes}, DT-OPT- U_{opt} and DT-OPT-PU belong to P.*

4.2 Possibilistic likely dominance ($LN, L\Pi$)

Fortunately, the optimization of the possibilistic likely dominance criteria also belongs to P. Indeed:

Proposition 6. *$\geq_{L\Pi}$ and $\geq_{LN}$ satisfy the weak monotony principle*

Algorithm 1 is thus sound and complete for $\geq_{L\Pi}$ and $\geq_{LN}$, and provides in polytime any possibilistic decision tree with a strategy optimal w.r.t. these criteria.

Corollary 2. *$DT-OPT-LN$ and $DT-OPT-L\Pi$ belong to P.*

It should be noticed that, contrarily to what can be done with the three previous rules, the likely dominance comparison of two lotteries will be reduced to a simple comparison of aggregated values (Line (2)) Anyway, since only one best strategy is looked for, the transitivity of $>_{L\Pi}$ (resp. $>_{L\Pi}$) guarantees the correctness of the procedure - the non transitivity on the indifference is not a handicap when only one among the best strategies is looked for. The difficulty would be raised if we were looking for all the best strategies.

4.3 Possibilistic Choquet integrals (Ch_N, Ch_Π)

The situation is thus very confortable with qualitative utilities, binary possibilistic utility and likely dominance. It is much lesser comfortable for the case of numerical utilities, i.e. when the aim is to optimize a possibilistic Choquet integral (either Ch_N or Ch_Π). The point is that the possibilistic Choquet integrals (as many other Choquet integrals) do no satisfy the monotonicity principle:

Counter Example 2 (From [11]). *Let* $L = \langle 0.2/0, 0.5/0.51, 1/1\rangle$, $L' = \langle 0.1/0, 0.6/0.5, 1/1\rangle$ *and* $L" = \langle 0.01/0, 1/1\rangle$.
$L_1 = (\alpha \wedge L) \vee (\beta \wedge L")$ *and* $L_2 = (\alpha \wedge L') \vee (\beta \wedge L")$, *with* $\alpha = 0.55$ *and* $\beta = 1$. *Using Equation (5) we have:* $Reduction(L_1) = \langle 0.2/0, 0.5/0.51, 1/1\rangle$ *and* $Reduction(L_2) = \langle 0.1/0, 0.55/0.5, 1/1\rangle$.
Computing $Ch_N(L) = 0.653$ *and* $Ch_N(L') = 0.650$ *we get* $L \geq_{Ch_N} L'$. *But* $Ch_N(Reduction(L_1)) = 0.653 < Ch_N(Reduction(L_3)) = 0.675$, *i.e.* $(\alpha \wedge L) \vee (\beta \wedge L") <_{Ch_N} (\alpha \wedge L') \vee (\beta \wedge L")$: *this contradicts the monotonicity property.*

Let $L = \langle 1/0, 0.5/0.51, 0.2/1\rangle$, $L' = \langle 1/0, 0.6/0.5, 0.1/1\rangle$ *and* $L" = \langle 1/0, 0.49/0.51\rangle$. $L_1 = (\alpha \wedge L) \vee (\beta \wedge L")$ *and* $L_2 = (\alpha \wedge L') \vee (\beta \wedge L")$, *with* $\alpha = 1$ *and* $\beta = 0.55$. *Using Equation (5) we have:* $Reduction(L_1) = \langle 1/0, 0.5/0.51, 0.2/1\rangle$ *and* $Reduction(L_2) = \langle 1/0, 0.6/0.5, 0.49/0.51, 0.1/1\rangle$.
Computing $Ch_\Pi(L) = 0.353$ *and* $Ch_\Pi(L') = 0.350$ *we get* $L >_{Ch_\Pi} L'$. *But* $Ch_\Pi(Reduction(L_1)) = 0.3530 < Ch_\Pi(Reduction(L_2)) = 0.3539$, *i.e.* $(\alpha \wedge L) \vee (\beta \wedge L") <_{Ch_\Pi} (\alpha \wedge L') \vee (\beta \wedge L")$: *this contradicts the monotonicity property.*

Proposition 7. $DT-OPT-Ch_N$ *and* $DT-OPT-Ch_\Pi$ *are NP-Complete.*

5 Extension to Order of Magnitude Expected Utility

Order of Magnitude Expected Utility theory relies on a qualitative representation of beliefs, initially proposed by Spohn [19], via *Ordinal Conditional Functions*, and later popularized under the term *kappa-rankings*. $\kappa : 2^\Omega \to Z^+ \cup \{+\infty\}$ is a kappa-ranking if and only if:

S1 $\min_{\omega\in\Omega} \kappa(\{\omega\}) = 0$

S2 $\kappa(A) = \min_{\omega\in A} \kappa(\{\omega\})$ if $\emptyset \neq A \subseteq A$, $\kappa(\emptyset) = +\infty$

Note that event A is more likely than event B if and only if $\kappa(A) < \kappa(B)$: kappa-rankings have been termed as *disbelief functions*. They receive an interpretation in terms of order of magnitude of *small* probabilities. $\kappa(A) = i$ is equivalent to $P(A)$ is of the same order of ε^i, for a given fixed infinitesimal ε. There exists a close link between kappa-rankings and possibility measures, insofar as any kappa-ranking can be represented by a possibility measure, and vice versa.

Order of magnitude utilities have been defined in the same way [13, 20]. Namely, an order of magnitude function $\mu : X \to Z^+ \cup \{+\infty\}$ can be defined in order to rank outcomes $x \in X$ in terms of degrees of "dissatisfaction". Once again, $\mu(x) < \mu(x')$ if and only if x is more desirable than x', $\mu(x) = 0$ for the most desirable consequences, and $\mu(x) = +\infty$ for the least desirable consequences. μ is interpreted as: $\mu(x) = i$ is equivalent to say that the utility of x is of the same order of ε^i, for a given fixed infinitesimal ε. An *order of magnitude expected utility* (OMEU) model can then be defined (see [13, 20] among others). Considering an order of magnitude lottery $L = \langle \kappa_1/\mu_1, \ldots, \kappa_n/\mu_n\rangle$ as representing a some probabilistic lottery, it is possible to compute the order of magnitude of the expected utility of this probabilistic lottery: it is equal to $\min_{i=1,n}\{\kappa_i + \mu_i\}$. Hence the definition of the OMEU value of a κ lottery $L = \langle \kappa_1/\mu_1, \ldots, \kappa_n/\mu_n\rangle$:

$$OMEU(L) = \min_{i=1,n}\{\kappa_i + u_i\}. \tag{20}$$

The preference relation $\geq_{OMEU}$ is thus defined as:

$$L \geq_{OMEU} L' \iff OMEU(L) \leq OMEU(L'). \tag{21}$$

We shall now define kappa decision trees: for any $C_i \in \mathcal{C}$, the uncertainty pertaining to the more or less possible outcomes of each C_i is represented by a kappa degree $\kappa_i(N) = Magnitude(P(N|past(C_i))), \forall N \in Succ(C_i)$ (with the normalization condition that the degree $\kappa = 0$ is given to at least one N in $Succ(C_i)$). According to the interpretation of kappa ranking in terms of order of magnitude of probabilities, the product of infinitesimal the conditional probabilities along the paths lead to a sum of the kappa levels. Hence the following principle of reduction of the kappa lotteries:

$$\begin{aligned} &Reduction(\kappa_1 \wedge L_1 \vee \cdots \vee \kappa_m \wedge L_m) \\ &= \langle \min_{j=1..m} (\kappa_1^j + \kappa_j)/u_1, \ldots, \min_{j=1..m} (\kappa_n^j + \kappa_j)/u_n\rangle. \end{aligned} \tag{22}$$

The last result of this paper is that OMEU satisfies the weak monotonicity principle:

Proposition 8. $\forall L, L', L" \in \mathcal{L}$,
$OMEU(L) \geq OMEU(L')$
$\Rightarrow OMEU((\alpha \wedge L) \vee (\beta \wedge L")) \geq OMEU((\alpha \wedge L') \vee (\beta \wedge L"))$

As a consequence dynamic programming is sound and complete for the optimization of Order of Magnitude Expected Utility:

Corollary 3. *There exists a polynomial algorithm for finding a strategy optimal w.r.t. the Order of Magnitude Expected Utility for any kappa decision tree.*

6 Conclusion

In this paper, we have shown that the strategy optimization in possibilistic decision trees is tractable for most of the criteria, extending the results about the qualitative utility criteria to other criteria, namely the likely dominance rule. We have also shown that the problem is intractable for the Choquet-based criteria. Finally, we have extended this work to OMEU, defining a new model for sequential decision trees, extending the notion of reduction to kappa lotteries and showing that this models obey the weak monotonicity principle. These results are summarized in Table 1. It should be noticed that the optimization of the possibilistic Choquet integrals is "only" NP-hard: the computation of the Choquet value of a possibilistic strategy is polynomial, whereas this computation can be more costly for other capacity measures; for instance computing the Choquet value of a strategy on the basis of its multi prior expected utility is itself a NP-hard problem - and the corresponding optimization problem is probably beyond NP. So, it appears that the use of possibilistic decision criteria does not lead to an increase in complexity, except for Choquet integrals. This is good news and allows the extension of our work to possibilistic decision diagrams. Concerning the Choquet case, further work includes the development of a direct evaluation algorithm for possibilistic influence diagrams where possibilistic Choquet integrals are used as a decision criteria inspired by the variable elimination approach.

Table 1: Results about the complexity of $DT - OPT$.

U_{pes}	U_{opt}	PU	Ch_N	Ch_Π	$L\Pi$	LN	OMEU
P	P	P	NP-hard	NP-hard	P	P	P

References

[1] D. Dubois, H. Fargier, and P. Perny. Qualitative decision theory with preference relations and comparative uncertainty: An axiomatic approach. *AIJ*, 148:219–260, 2003.

[2] D. Dubois, L. Godo, H. Prade, and A. Zapico. Making decision in a qualitative setting: from decision under uncertainty to case-based decision. In *KR'06*, 1998.

[3] D. Dubois and H. Prade. *Possibility theory, an approach to computerized processing of uncertainty.* Plenum Press, New York, NY, 1988.

[4] D. Dubois and H. Prade. Possibility theory as a basis for qualitative decision theory. In *IJCAI*, pages 1924–1930, 1995.

[5] L. Garcia et R. Sabbadin. Possibilistic influence diagrams. In *ECAI*, pages 372–376, 2006.

[6] H. Fargier and P. Perny. Qualitative models for decision under uncertainty without the commensurability assumption. In *UAI*, pages 188–195, 1999.

[7] P. H. Giang and P. P. Shenoy. A comparison of axiomatic approaches to qualitative decision making using possibility theory. In *UAI*, pages 162–170, 2001.

[8] P.H. Giang and P.P. Shenoy. Two axiomatic approaches to decision making using possibility theory. *EJOR*, 162(2):450–467, 2005.

[9] E. Hisdal. Conditional possibilities independence and non interaction. *Fuzzy Sets and Systems*, 1:283–297, 1978.

[10] G. Jeantet and O. Spanjaard. Rank-dependent probability weighting in sequential decision problems under uncertainty. In *ICAPS*, pages 148–155, 2008.

[11] H. Fargier N. Ben Amor and W. Guezguez. Necessity-based choquet integrals for sequential decision making under uncertainty. In *IPMU*, pages 222–236, 2010.

[12] J.V. Neumann and O. Morgenstern. *Theory of games and economic behavior.* Princeton Univ. Press, 1948.

[13] J. Pearl. From conditional oughts to qualitative decision theory. In *UAI'93*, pages 12–20, 1993.

[14] P. Perny, O. Spanjaard, and P. Weng. Algebraic markov decision processes. In *IJCAI*, pages 1372–1377, 2005.

[15] Y. Rebille. Decision making over necessity measures through the choquet integral criterion. *Fuzzy Sets and Systems*, 157(23):3025–3039, 12 2006.

[16] R. Sabbadin. A possibilistic model for qualitative sequential decision problems under uncertainty in partially observable environments. In *UAI*, pages 567–574, 1999.

[17] R. Sabbadin, H. Fargier, and J. Lang. Towards qualitative approaches to multi-stage decision making. *IJAR*, 19(3-4):441–471, 1998.

[18] D. Schmeidler. Subjective probability and expected utility without additivity. *Econometrica*, 57:517–587, 1989.

[19] W. Spohn. A general non-probabilistic theory of inductive reasoning. In *UAI'90*, pages 315–322, 1990.

[20] N. Wilson. An order of magnitude calculus. In *UAI'95*, pages 548–555, 1995.

PROOFS

Proof of Proposition 1.

We suppose without loss of generality that utililities in $U = \{u_1, \ldots, u_n\}$ are ranked in ascending order i.e. $\forall u_i, u_j \in U,\ j < l \iff u_j < u_l)$. Let n be the index of the greater u_k such that $\lambda_k > 0$. Hence there is a λ_j, $j \leq k$ such that $\lambda_j = 1$ and thus $1 - max(\lambda_1, \ldots, \lambda_j) = 0$ for any $j > k$.

Since $u_i \leq \underset{u_j \in L, \lambda_j > 0}{max} u_j$, $i \leq k$, L and L' can be written as follows:
$L = \langle \lambda_1/u_1, \ldots, \lambda_{i-1}/u_{i-1}, \lambda_i/u_i, \lambda_{i+1}/u_{i+1}, \ldots, \lambda_n/u_n \rangle$
$L' = \langle \lambda_1/u_1, \ldots, \lambda_{i-1}/u_{i-1}, \lambda' i/u_i, \lambda_{i+1}/u_{i+1}, \ldots, \lambda_n/u_n \rangle$

$Ch_N(L)$ can be decomposed into three terms V_1, V_2, V_3, i.e. $Ch_N(L) = V_1 + V_2 + V_3$ where:

$$\begin{aligned}
V_1 &= u_1 + (u_2 - u_1)(1 - \lambda_1) \\
&\quad + \ldots \\
&\quad + (u_i - u_{i-1})(1 - max(\lambda_1, \ldots, \lambda_{i-1})) \\
V_2 &= (u_{i+1} - u_i)(1 - max(\lambda_1, \ldots, \lambda_i)) + \\
&\quad (u_{i+2} - u_{i+1})(1 - max(\lambda_1, \ldots, \lambda_i, \lambda_{i+1})) \\
&\quad + \ldots \\
&\quad + (\mathrm{u}_k - u_{k-1})(1 - max(\lambda_1, \ldots, \lambda_i, \lambda_{i+1}, \ldots, \lambda_{k-1})) \\
\mathrm{V}_3 &= (u_{k+1} - u_k)(1 - max(\lambda_1, \ldots, \lambda_k)) \\
&\quad + \ldots \\
&\quad + (u_n - u_{n-1})(1 - max(\lambda_1, \ldots, \lambda_n))
\end{aligned}$$

Since $(1 - max(\lambda_1, \ldots, \lambda_j) = 0$ for any $j > k$, $V_3 = 0$: $Ch_N(L) = V_1 + V_2$

$Ch_N(L')$ can also be decomposed in 3 terms $V_1', V'2, V'3$, i.e. $Ch_N(L') = V'1 + V'2 + V'3$ where :

$$\begin{aligned}
V_1' &= u_1 + (u_2 - u_1)(1 - \lambda_1) \\
&\quad + \ldots \\
&\quad + (u_i - u_{i-1})(1 - max(\lambda_1, \ldots, \lambda_{i-1})) \\
&= V_1 \\
V_2' &= (u_{i+1} - u_i)(1 - max(\lambda_1, \ldots, \lambda_{i-1}, \lambda_i')) + \\
&\quad (u_{i+2} - u_{i+1})(1 - max(\lambda_1, \ldots, \lambda_{i-1}, \lambda_i', \lambda_{i+1})) \\
&\quad + \ldots \\
&\quad + (u_k - u_{k-1})(1 - max(\lambda_1, \ldots, \lambda_{i-1}, \lambda_i', \\
&\qquad \lambda_{i+1}, \ldots, \lambda_{k-1})) \\
V_3' &= (u_{k+1} - u_k)(1 - max(\lambda_1, \ldots, \lambda_k)) \\
&\quad + \ldots \\
&\quad + (u_n - u_{n-1})(1 - max(\lambda_1, \ldots, \lambda_n)) \\
&= V_3 \\
&= 0
\end{aligned}$$

As a consequence, it holds that:
$Ch_N(L) - Ch_N(L') = V_2 - V_2'$.
Since $\lambda_i' \geq \lambda_i$, $1 - max(\lambda_1, \ldots, \lambda_{i-1}, \lambda_i', \ldots, \lambda_j)$ is lower than $1 - max(\lambda_1, \ldots, \lambda_{i-1}, \lambda_i, \ldots, \lambda_j)$, for any j.

Thus $V_2 \geq V_2'$ and $Ch_N(L) \geq Ch_N(L')$.

□

Proof of Proposition 2.

Let L_1, L_2 be two lotteries such that:
$\underset{u_i \in L_2, \lambda_i > 0}{max} u_i \leq \underset{u_i \in L_1, \lambda_i > 0}{max} u_i$.

Let $L = Reduction(\langle 1/L_1, 1/L_2 \rangle)$. From the definition of the reduction (Equation 5), it hold that $\lambda_i = \max(\min(1, \lambda_1^j), \min(1, \lambda_2^j)) = \max(\lambda_1^j, \lambda_2^j), \forall i$.

Since $\underset{u_j \in L_2, \lambda_j^2 > 0}{max} u_j \leq \underset{u_j \in L_1, \lambda_j^1 > 0}{max} u_j$, we can get L from L_1 by increasing each λ_j^1 to the value $\max(\lambda_j^1, \lambda_j^2)$, for any j such that $\lambda_j^1 < \lambda_j^2$. According to Proposition 1, this is done without increasing the value of the Choquet integral of L, hence $Ch_N(L) \leq Ch_N(L_1)$.

Formally, $L^0 = L_1$, then for $j = 1 \ldots n$,
$L^j = \langle \lambda_1^j/u_1, \ldots, \lambda_n^j/u_n \rangle$ such that for any $k \neq j$, $\lambda_k^j = \lambda_k^{j-1}$ and $\lambda_j^j = \max(\lambda_j^{j-1}, \lambda_2^{j-1})$. By construction, $L^n = L$.
Thanks to Proposition 1, $Ch_N(L^j) \leq Ch_N(L^{j-1}), j = 1, n$. Then $Ch_N(L) \leq Ch_N(L_1)$.

□

Proof of Proposition 3.

Let $\delta \in \Delta = \{(D_0, \delta(D_0)), \ldots, (D_i, \delta(D_i)), \ldots, (D_n, \delta(D_l))\}$ be a complete and sound strategy.

We first compute the compound lottery corresponding to δ, merging each decision node D_i in δ with the chance node in $\delta(D_i)$, say C_i^δ. We get a compound lottery $L = \{C_0^\delta, \ldots, C_i^\delta, \ldots, C_l^\delta\}$; the merging is performed linearly in the number of decision nodes in the strategy.

Then we can suppose without loss of generality that the nodes are numbered in such a way that $i < j$ implies that C_i^δ does not belong to the subtree rooted C_j^δ (we label the nodes from the root to the leaves).

Then, for $i = m$ to 1, we replace each compound lottery $C_i^\delta =< \pi_i(X_{i1})/X_{i1}, \ldots, \pi_i(X_{ik_i})/X_{ik_i} >$ by its reduction, where $Succ(C_i^\delta) = \{X_{i1}, \ldots, X_{ik_i}\}$ is the set of successors of $C_i^\delta$and $k_i = Card(Succ(C_i^\delta))$. Because we proceed from the leaves to the root, the X_{i1} are simple lotteries. Since the min and max operation are linear, the reduction of this 2 level compound lottery is linear in the size of the compound lottery. The size of the resulting compound lottery is bounded by the sum of the size of the elementary lotteries before reduction, and thus linear. In any case, it is bounded by the number of levels in the scale, which is itself bounded by the number of edges and leaves in the tree (for the case where all the possibility degrees and all the utility degrees are different). Hence a complexity of the reduction is bounded by $O(|E + LN|)$, where E is the number of edges and LN is the number of leave

nodes in the strategy.

Thank to the backward recursion, each node in the strategy is visited only once. Thus a global complexity is bounded by $O(C.(E+LN))$, where E is the number of edges, LN the number of leave nodes and C the number of chance nodes in the strategy.

□

Proof of Proposition 4.

The principle of the Backward induction method at work in dynamic programming is to eliminate sub-strategies that are not better than the optimal sub-strategies

The principe of monotonicity writes:
$L \geq_O L' \implies (\alpha \wedge L) \vee (\beta \wedge L") \geq_O (\alpha \wedge L') \vee (\beta \wedge L")$

It guarantees that the elimination of sub-strategies that are not strictly better than their concurrent is sound and complete for the decision trees of size 2. Notice that $L >_O L'$ does not imply that L' does not belong to an optimal strategy[5]; but it implies that if L' belongs to an optimal strategy, so does L. When, a unique strategy among the optimal one is searched for, the algorithm can forget about L'.

The sequel on the proof is direct, by recursion on the depth on the decision tree. Indeed, from $L \geq_O L' \implies (\alpha \wedge L) \vee (\beta \wedge L") \geq_O (\alpha \wedge L') \vee (\beta \wedge L")$, we get that $L \geq_O L' \implies \gamma((\alpha \wedge L) \vee (\beta \wedge L")) \vee \delta L^4 \geq_O \gamma((\alpha \wedge L') \vee (\beta \wedge L")) \vee \delta L^4$ and so on.

□

Proof of Proposition 5.

Weak monotonicity of PU

Consider any three lotteries L, L' and $L"$. We can suppose without loss of generality that they are in reduced form, i.e. that:

$L = \langle \overline{u}/\top, \underline{u}/\bot \rangle$,
$L' = \langle \overline{v}/\top, \underline{v}/\bot \rangle$,
$L" = \langle \overline{w}/\top, \underline{w}/\bot \rangle$.

Let $L_1 = Reduction((\alpha \wedge L) \vee (\beta \wedge L"))$ and $L_2 = Reduction((\alpha \wedge L') \vee (\beta \wedge L"))$. According to the reduction operation, we get:

- $L_1 = \langle \overline{u_1}/\top, \underline{u_1}/\bot \rangle$, where
  $\overline{u_1} = \max(\min(\alpha, \overline{u}), \min(\beta, \overline{w}))$ and
  $\underline{u_1} = \max(\min(\alpha, \underline{u}), \min(\beta, \underline{w}))$
- $L_2 = \langle \overline{u_2}/\top, \underline{u_2}/\bot \rangle$, where
  $\overline{u_2} = \max(\min(\alpha, \overline{v}), \min(\beta, \overline{w}))$ and
  $\underline{u_2} = \max(\min(\alpha, \underline{v}), \min(\beta, \underline{w}))$

Suppose that $L \geq_{PU} L'$. Recall that $max(\alpha, \beta) = 1$ and that $L \geq_{PU} L'$ arises in 3 cases (i.e. (i) $\overline{u} = \overline{v} = 1$ and $\underline{u} \leq \underline{v}$, (ii) $\overline{u} \geq \overline{v}$ and $\underline{u} = \underline{v} = 1$, (iii) $\overline{u} = 1$, $\overline{v} < 1$ and $\underline{v} = 1$). Hence 6 different cases. For each of them, we show that $L_1 \geq_{PU} L_2$ can be deduced :

- Case 1: $\overline{u} = \overline{v} = 1$ and $\underline{u} \leq \underline{v}$, $\alpha = 1$.
  $\overline{u} = \overline{v} = 1$ and $\alpha = 1$ implies that
  $\overline{u_1} = \max(\min(\alpha, \overline{u}), \min(\beta, \overline{w})) = 1$ and
  $\overline{u_2} = \max(\min(\alpha, \overline{v}), \min(\beta, \overline{w})) = 1$
  $\underline{u} \leq \underline{v}$ and $\alpha = 1$ implies that
  $\underline{u_1} = \min(\beta, \underline{w}) = \underline{u_2}$. Hence $L_1 =_{PU} L_2$.
- Case 2: $\overline{u} = \overline{v} = 1$ and $\underline{u} \leq \underline{v}$, $\beta = 1$, .
  $\overline{u} = \overline{v} = 1$ and $\beta = 1$ implies that $\overline{u_1} = \max(\min(\alpha, \overline{u})), \min(\beta, \overline{w}) = \max(\alpha, \overline{w})$ and $\overline{u_2} = \max(\min(\alpha, \overline{v}), \min(\beta, \overline{w})) = \max(\alpha, \overline{w}) = \max(\alpha, \overline{w}) = \overline{u_1}$.
  $\underline{u} \leq \underline{v}$ and $\beta = 1$ implies that $\underline{u_1} = \max(\min(\alpha, \underline{u}), \underline{w})$ and $\underline{u_1} = \max(\min(\alpha, \underline{v}), \underline{w})$; since $\underline{u} \leq \underline{v}$, we get $\underline{u_1} \leq \underline{u_2}$

  Recall that $\max(\overline{w}, \underline{w}) = 1$. When $\overline{w} = 1$, we get $\overline{u_1} = \overline{u_2} = 1$ and $\underline{u_1} \leq \underline{u_2}$, and thus $L_1 \geq_{PU} L_2$. When $\underline{w} = 1$, $\underline{u_1} = \underline{u_2} = 1$ and $\overline{u_1} = \overline{u_2}$. Hence $L_1 =_{PU} L_2$.
- Case 3: $\overline{u} \geq \overline{v}$ and $\underline{u} = \underline{v} = 1$, $\alpha = 1$. This case is similar to case 1 (exchanging the roles of the positive utilities and of the negative utilities.
- Case 4: $\overline{u} \geq \overline{v}$ and $\underline{u} = \underline{v} = 1$, $\beta = 1$. This case is similar to case 2 (exchanging the roles of the positive utilities and of the negative utilities.
- Case 5 : $\overline{u} = 1$, $\overline{v} < 1$, $\underline{v} = 1$, $\alpha = 1$. Then: $\overline{u_1} = 1$, $\underline{u_1} = \max(\underline{u}, \min(\beta, \underline{w}))$, $\overline{u_2} = \max(\overline{v}, \min(\beta, \overline{w}))$ and $\underline{u_2} = 1$. That is to say $\overline{u_1} = 1 \geq \overline{u_2}$ and $\underline{u_1} \leq \underline{u_2} = 1$. Thus $L_1 \geq_{PU} L_2$.
- Case 6 : $\overline{u} = 1$, $\overline{v} < 1$, $\underline{v} = 1$, $\beta = 1$. Then:
  $\overline{u_1} = \max(\alpha, \overline{w})$
  $\underline{u_1} = \max(\min(\alpha, \underline{u}), \underline{w})$
  $\overline{u_2} = \max(\min(\alpha, \overline{v}), \overline{w})$
  $\underline{u_2} = \max(\alpha, \underline{w})$.

  When $\overline{w} = 1$ (resp. $\underline{w} = 1$) we get $\overline{u_1} = \overline{u_2} = 1$ and $\underline{u_1} \leq \underline{u_2}$ ($\underline{u_1} = \underline{u_2} = 1$ $\overline{u_1} \geq \overline{u_2}$). Hence $L_1 \leq_{PU} L_2$.

So, in any case, $L \geq_{PU} L'$ implies that $L_1 \leq_{PU} L_2$, i.e. $L_1 = Reduction((\alpha \wedge L) \vee (\beta \wedge L")) \geq L_2 =$

[5] That is why we called the property "weak monotony" - strong monotony rather writes $L \geq_O L' \iff (\alpha \wedge L) \vee (\beta \wedge L") >_O (\alpha \wedge L') \vee (\beta \wedge L")$. Strong monotony thus adds to weak monotony that if $L >_O L'$ then L' does not belong to an optimal strategy

$Reduction((\alpha \wedge L') \vee (\beta \wedge L"))$. As a consequence $L \geq_{PU} L'$ implies $(\alpha \wedge L) \vee (\beta \wedge L") \geq (\alpha \wedge L') \vee (\beta \wedge L")$.

Weak monotonicity of U_{pes}

Consider any three lotteries L, L' and $L"$. We can, without loss of generality, suppose that L, L' and $L"$ are constant lotteries (thanks to certainty equivalence axiom [4]). L, L' and $L"$ thus write $L =< 1/u >$, $L' =< 1/u' >$ and $L" =< 1/u" >$: any utility degree different from u (resp. u', resp. $u"$) receives a possibility degree equal to 0.

If $L \sim_{U_{pes}} L'$ then from the independence axiom [4] we have $\langle \alpha/L, \beta/L" \rangle \sim_{U_{pes}} \langle \alpha/L', \beta/L" \rangle$ (under the assumption that $\max(\alpha, \beta) = 1$).

We thus only have to consider the case $L >_{U_{pes}} L'$. Since $U_{pes}(L) = u$ and $U_{pes}(L') = u'$, this implies that $u > u'$.

Let:
$L_1 = Reduction((\alpha \wedge L) \vee (\beta \wedge L")) =< \alpha/u, \beta/u" >$
$L_2 = Reduction((\alpha \wedge L') \vee (\beta \wedge L")) =< \alpha/u', \beta/u" >$.

Three cases are to be considered: $u" \geq u > u'$, $u > u' \geq u"$ and $u > u" > u'$

- Case 1 : $u" \geq u > u'$. Then:
  $U_{pes}(L_1) = \max(\min(u", 1 - \alpha), \min(u, 1)) = \max(\min(u", 1 - \alpha), u)$ and
  $U_{pes}(L_2) = \max(\min(u", 1 - \alpha), u')$.
  Obviously, $u > u'$ implies
  $\max(\min(u", 1 - \alpha), u) \geq \max(\min(u", 1 - \alpha), u')$,
  i.e. $U_{pes}(L_1) \geq U_{pes}(L_2)$.

- Case 2 : $u > u' \geq u"$. Then
  $U_{pes}(L_1) = \max(\min(u, 1 - \beta), u")$ and
  $U_{pes}(L_2) = \max(\min(u', 1 - \beta), u")$. Obviously, $u > u'$ implies $\max(\min(u, 1 - \beta), u") \geq \max(\min(u', 1 - \beta), u")$, i.e. $U_{pes}(L_1) \geq U_{pes}(L_2)$.

- Case 3: $u > u" > u'$. Hence:
  $U_{pes}(L_1) = \max(\min(u, 1 - \beta), u")$ and
  $U_{pes}(L_2) = \max(\min(u", 1 - \alpha), u')$.
  Recall that $\max(\alpha, \beta) = 1$.
  If $\alpha = 1$, $U_{pes}(L_2) = u'$; from $u" > u'$ we then get: $\max(\min(u, 1 - \beta), u") \geq u'$, i.e.:
  $U_{pes}(L_1) \geq U_{pes}(L_2)$.
  If $\beta = 1$, $U_{pes}(L_1) = u"$. From $u" > u'$, we get $u" \geq \max(\min(u", 1 - \alpha), u')$ i.e. $U_{pes}(L_1) \geq U_{pes}(L_2)$.

So, $U_{pes}(L_1) \geq U_{pes}(L_2)$: in any case, $(\alpha \wedge L) \vee (\beta \wedge L") \geq_{U_{Pes}} (\alpha \wedge L') \vee (\beta \wedge L"))$.

Weak monotonicity of U_{opt}

The proof is similar to the previous one. Consider any three lotteries L, L' and $L"$. We can without loss of generality suppose that L, L' and $L"$ are constant lotteries (thanks to certainty equivalence axiom [4]). L, L' and $L"$ thus write $L =< 1/u >$, $L' =< 1/u' >$ and $L" =< 1/u" >$: any utility degree different from u (resp. u', resp. $u"$) receives a possibility degree equal to 0.

If $L \sim_{U_{opt}} L'$ then from the independance axiom [4] we have $\langle \alpha/L, \beta/L" \rangle \sim_{U_{opt}} \langle \alpha/L', \beta/L" \rangle$ (under the assumption that $max(\alpha, \beta) = 1$).

We thus only have to consider the case $L >_{U_{opt}} L'$. Because $U_{opt}(L) = u$ and $U_{opt}(L') = u'$, this implies that $u > u'$

Let:
$L_1 = Reduction((\alpha \wedge L) \vee (\beta \wedge L")) =< \alpha/u, \beta/u" >$
$L_2 = Reduction((\alpha \wedge L') \vee (\beta \wedge L")) =< \alpha/u', \beta/u" >$.

Three cases are to be considered: $u" \geq u > u'$, $u > u' \geq u"$ and $u > u" > u'$

- Case 1 : $u" \geq u > u'$. Then
  $U_{opt}(L_1) = \max(\min(u, \max(\alpha, \beta)), \min(u", \beta))$
  and
  $U_{opt}(L_2) = \max(\min(u', \max(\alpha, \beta)), \min(u", \beta))$.
  Recall that $\max(\alpha, \beta) = 1$. Thus:
  $U_{opt}(L_1) = \max(\min(u, 1), \min(u", \beta))$
  $= \max(u, \min(u", \beta))$ and
  $U_{opt}(L_2) = \max(\min(u', 1), \min(u", \beta))$
  $= \max(u', \min(u", \beta))$. $u > u'$ implies $\max(u, \min(u", \beta)) \geq \max(u', \min(u", \beta))$, i.e. $U_{opt}(L_1) > U_{opt}(L_2)$.

- Case 2 : $u > u' \geq u"$. Then
  $U_{opt}(L_1) = \max(\min(u, \alpha), \min(u", 1))$
  $= \max(\min(u, \alpha), u")$ and
  $U_{opt}(L_2) = \max(\min(u', \alpha), \min(u", 1))$
  $= \max(\min(u', \alpha), u")$. $u > u'$ implies $\max(\min(u, \alpha), u") \geq \max(\min(u', \alpha), u")$, i.e. $U_{opt}(L_1) \geq U_{opt}(L_2)$.

- Case 3: $u > u" > u'$. Hence
  $U_{opt}(L_1) = \max(\min(u, \alpha), \min(u", 1))$
  $= \max(\min(u, \alpha), u")$ and
  $U_{opt}(L_2) = \max(\min(u', 1), \min(u", \beta))$
  $= \max(u', \min(u", \beta))$.

  If $\alpha = 1$, then:
  $U_{opt}(L_1) = \max(u, u") = u$ and
  $U_{opt}(L_2) = \max(u', \min(u", \beta))$. $u > u"$, so $u > \min(u", \beta)$; moreover $u > u'$, so $u > \max(\min(u", \beta), u')$,, i.e. $U_{opt}(L_1) > U_{opt}(L_2)$.

If $\beta = 1$, $U_{opt}(L_1) = \max(\min(u, \alpha), u")$ and $U_{opt}(L_2) = \max(u', u") = u"$. $u" \geq u"$, so $\max(\min(u, \alpha), u") \geq u"$, i.e. $U_{opt}(L_1) \geq U_{opt}(L_2)$.

So, $U_{opt}(L_1) \geq U_{opt}(L_2)$: in any case, $(\alpha \wedge L) \vee (\beta \wedge L") \geq_{U_{opt}} (\alpha \wedge L') \vee (\beta \wedge L"))$.

□

Proof of Proposition 6.

Consider any three lotteries L, L' and $L"$. We can suppose without loss of generality that they are in reduced form, i.e. that:
$L = \langle \lambda_1/u_1, \ldots, \lambda_n/u_n \rangle$,
$L' = \langle \lambda_1^{'}/u_1^{'}, \ldots, \lambda_n^{'}/u_n^{'} \rangle$,
$L" = \langle \lambda_1^{"}/u_1^{"}, \ldots, \lambda_n^{"}/u_n^{"} \rangle$.

Let $L_1 = Reduction(\alpha \wedge L \vee \beta \wedge L")$. According to the definition of the reduction, the possibility of getting a utility degree $u_k \in U$ from L_1 is equal to $\lambda_k^1 = \max(\min(\alpha, \lambda_k), \min(\beta, \lambda_k^{"}))$

Let $L_2 = Reduction(\alpha \wedge L' \vee \beta \wedge L")$. According to the definition of the reduction, the possibility of getting a utility degree $u_k \in U$ from L_2 is equal to $\lambda_k^2 = \max(\min(\alpha, \lambda_k^{'}), \min(\beta, \lambda_k^{"}))$

Weak monotonicity of $\geq_{L\Pi}$

Suppose that $L \geq_{L\Pi} L'$, i.e. $\Pi(L \geq L') \geq \Pi(L' \geq L)$. Consider the set of utility degrees receiving a possibility equal to 1 in L: $U = \{u_i, \lambda_i = 1\}$ and the set of utility degrees receiving a possibility equal to 1 in L': $U' = \{u_i, \lambda_i^{'} = 1\}$. These sets are not empty since the distributions are normalized. $\Pi(L \geq L') \geq \Pi(L' \geq L)$ if and only if $\underset{u \in U}{max} \geq \underset{u \in U'}{min}$.

Let $U_1 = \{u_k, \lambda_k = 1\}$ and $U_2 = \{u_k, \lambda'_k = 1\}$.

When $\alpha = 1$, $U \subseteq U_1$ and $U' \subseteq U_2$. Hence $\underset{u \in U}{max}$ belongs to U_1 and $\underset{u \in U'}{min}$ belongs to U_2, $\underset{u \in U_1}{max} \geq \underset{u \in U}{max}$ and $\underset{u \in U_2}{min} \leq \underset{u \in U'}{min}$. Thus $\underset{u \in U_1}{max} \geq \underset{u \in U_2}{min}$, i.e. $L_1 \geq_{L\Pi} L_2$.

When $\alpha < 1$, $\beta = 1$. Let u_i be any of the degrees that receive a degree 1 in $L"$. Since $\beta = 1$, u_i belongs to both U_1 and U_2. Thus $\Pi(L_1 \geq L_2) = \Pi(L_2 \geq L_1) = 1$

So, $L \geq_{L\Pi} L'$ implies that $L_1 \geq_{L\Pi} L_2$, i.e. that $Reduction(\alpha \wedge L \vee \beta \wedge L") \geq_{L\Pi} Reduction(\alpha \wedge L' \vee \beta \wedge L")$. Which means that $L \geq_{L\Pi} L'$ implies $\alpha \wedge L \vee \beta \wedge L" \geq_{L\Pi} \alpha \wedge L' \vee \beta \wedge L"$: weak monotonicity is satisfied by $\geq_{L\Pi}$.

Weak monotonicity of $\geq_{LN}$

Suppose that $L \geq_{LN} L'$, i.e. $N(L \geq L') \geq N(L' \geq L)$. Consider the set of utility degrees receiving a possibility equal to 1 in L: $U = \{u_i, \lambda_i = 1\}$ and the set of utility degrees receiving a possibility equal to 1 in L': $U' = \{u_i, \lambda_i^{'} = 1\}$. These sets are not empty since the distributions are normalized. $N(L \geq L')$ is equal to zero as soon as $\underset{u \in U'}{max} \geq \underset{u \in U}{min}$. $N(L \geq L')$ is positive (and $N(L' \geq L)$ is null) iff $\underset{u \in U}{min} > \underset{u \in U'}{max}$.

Thus $N(L \geq L') \geq N(L' \geq L)$ when either $\underset{u \in U}{min} > \underset{u \in U'}{max}$ or $\underset{u \in U}{min} \leq \underset{u \in U'}{max}$ and $\underset{u \in U}{min} \leq \underset{u \in U}{max}$.

Suppose that $\beta = 1$. Let u_i be any of the degrees that receive a degree 1 in $L"$. Since $\beta = 1$, u_i belongs to both U_1 and U_2. Thus $N(L_1 \geq L_2) = N(L_2 \geq L_1) = 0$

Suppose that $\beta < 1$. Then $\alpha = 1$ and thus $U \subseteq U_1$ and $U_2 \subseteq U'_L$. In particular $\underset{u \in U}{min}$ belongs to U_1 and $\underset{u \in U'}{max}$ belongs U_2. Thus $\Pi(L_1 \geq L_2) = 1$: $N(L_2 \geq L_1) = 0$. This implies that $N(L_1 \geq L_2) \geq N(L_2 \geq L_1)$.

So, $L \geq_{LN} L'$ implies that $L_1 \geq_{LN} L_2$, i.e. that $Reduction(\alpha \wedge L \vee \beta \wedge L") \geq_{LN} Reduction(\alpha \wedge L' \vee \beta \wedge L")$. Which means that $L \geq_{LN} L'$ implies $\alpha \wedge L \vee \beta \wedge L" \geq_{LN} \alpha \wedge L' \vee \beta \wedge L"$: weak monotonicity is satisfied by $\geq_{LN}$.

□

Proof of Proposition 7.

We first prove that $DT{-}OPT{-}Ch_N$ and $DT{-}OPT{-}Ch_\Pi$ can be assigned to the NP class.

Membership to NP

The membership of $DT - OPT - Ch_N$ (resp $DT - OPT - Ch_\Pi$) to NP is straightforward, using Algorithm 2 (resp. Algorithm 3):

Algorithm 2:

```
begin
    % NP oracle
    Guess a strategy δ from T
    Set L = Reduce(δ) , using equation 5
    % Compute Ch_N
    max ← 0
    Ch_N ← u_1
    for i = 2, n do
        if max < λ_j^L then max ← λ_j^L
        Ch_N ← Ch_N + (u_i − u_{i−1}) ∗ (1 − max)
    Check that Ch_N ≥ α
end
```

Since the reduction operation is linear in the size of the compound Lottery and the computation of the Necessity-based Choquet value (resp. the Possibility-based Choquet value) is linear in the number of utility levels in the utility scale, the full procedure is polynomial. Hence $DT - OPT - Ch_N$ (resp. $DT - OPT - Ch_\Pi$) belongs to NP.

Algorithm 3:

begin
- % *NP oracle*
- Guess a strategy δ from T
- Set $L = Reduce(\delta)$, using equation 5
- % *Compute* Ch_Π
- $max \leftarrow 0$
- $Ch_\Pi \leftarrow u_1$
- **for** $i = n, 1$ **do**
  - **if** $max < \lambda_j^L$ **then** $max \leftarrow \lambda_j^L$
  - $Ch_\Pi \leftarrow Ch_\Pi + (u_i - u_{i-1}) * max$
- Check that $Ch_\Pi \geq \alpha$

end

NP-Hardness of $DT - OPT - Ch_N$

The hardness of the problem is obtained by a reduction from the 3-SAT problem. Each instance of the 3-SAT problem is a CNF-formula consisting of m clauses, denoted by $Cl = \{Cl_1, \ldots, Cl_m\}$, on a set of n propositional variables $X = \{X_1, \ldots, X_n\}$ such that $\forall X_i \in X$, $X_i = x_i$ or $X_i = \neg x_i$. x_i and $\neg x_i$ are called literals and the set of all literals is denoted L. Each clause Cl_i is composed of 3 literals, denoted by l_1, l_2 and l_3. Given a 3-CNF, the question is if there is a value-assignment of its literals which satisfies its clauses or not.

We use the transformation procedure outlined by algorithm 6 to transform any 3CNF into a possibilistic decision tree. This transformation, illustrated in the example of Figure 2, can be summarized as follows:

- For each literal $l \in L$ we define a utility u_l and a possibility degree λ_{x_i}. We also define a utility degree $u_\top$ that will be greater than all u_l.
- For each $x_i \in X$ we associate a decision node D_{x_i} with two chance nodes $C_{x_i} =< 1/u_\top, \lambda_{x_i}/u_{x_i} >$ and $C_{\neg x_i} =< 1/u_\top, \lambda_{\neg x_i}/u_{\neg x_i} >$ to $\neg x_i$ as children. The first one represents the choice x_i and the second one the choice $\neg x_i$.
- For each $Cl_i = \{l_1, l_2, l_3\} \in Cl$ we define a decision node D_{Cl_i} with three chance nodes as children:
  $C^i_{l_1} =< 1/u_\top, \lambda_{l_1}/u_{l_1} >$ (meaning that the satisfaction of Cl_i is ensured by the choice of l_1),
  $C^i_{l_2} =< 1/u_\top, \lambda_{l_2}/u_{l_2} >$ (meaning that the satisfaction of Cl_i is ensured by the choice of l_2)
  $C^i_{l_3} =< 1/u_\top, \lambda_{l_3}/u_{l_3} >$ (meaning that the satisfaction of Cl_i is ensured by the choice of l_3).
  When selecting a chance node for D_{Cl_i}, a strategy specifies how it intends to satisfy Cl_i.

This transformation is performed in $O(m + n)$. The decision tree contains $m + n + 1$ decision nodes, $3m + 2n + 1$ chance nodes and $(3m + 2n) \times 2$ leaves. A strategy δ can select the literals in a consistent manner

Algorithm 4: Necessity-based transformation

Data: A CNF $Cl = \{Cl_1, \ldots, Cl_m\}$ on $X = \{X_1, \ldots, X_n\}$
Result: Possibilistic decision tree $\Pi\mathcal{T}$

begin
- Fix $\epsilon \in [0, 1]$ such that $\epsilon^n < 1/2$
- **foreach** $X_i \in X$ **do**
  - $u_{x_i} \leftarrow 2(n - i) + 1$
  - $\lambda_{x_i} \leftarrow \epsilon^{i+1}$
  - $u_{\neg x_i} \leftarrow 2(n - i) + 2$
  - $\lambda_{\neg x_i} \leftarrow \epsilon^i$
- Let $u_\top \leftarrow 2n + 1$
- Create a decision node D_0 as the root of $\Pi\mathcal{T}$
- Create a chance node H as the unique Child of D_0
- **foreach** $X_i \in X$ **do**
  - Create a decision node D_{X_i} with two children C_{x_i} and $C_{\neg x_i}$:
    C_{x_i} is the simple lottery $\langle 1/u_\top, \lambda_{x_i}/u_{x_i} \rangle$
    $C_{\neg x_i}$ is the simple lottery $\langle 1/u_\top, \lambda_{\neg x_i}/u_{\neg x_i} \rangle$
    Add D_{X_i} to the children on H, with a possibility degree equal to 1
- **foreach** $Cl_i = \{l_1, l_2, l_3\} \in Cl$ **do**
  - Create a decision node D_{Cl_i} with as 3 children $C^i_{l_1}$, $C^i_{l_2}$, $C^i_{l_3}$:
    $C^i_{l_j}$ is the simple lottery $< 1/u_\top, \lambda_{l_1}/u_{l_1} >$
    $C^i_{l_j}$ is the simple lottery $< 1/u_\top, \lambda_{l_2}/u_{l_2} >$
    $C^i_{l_j}$ is the simple lottery $< 1/u_\top, \lambda_{l_3}/u_{l_3} >$
- Add D_{Cl_i} to the children on H, with a possibility degree equal to 1

end

return $\Pi\mathcal{T}$

(in this case, if l is chosen for X_i, $\neg l$ is never chosen for a D_{Cl_i}) or in a contradictory manner (i.e. δ selects l in some decision node in the tree and $\neg l$ for some others). By construction, there is a bijection between the non contradictory strategies, if any, and the models of the formula.

The simple lottery equivalent to some strategy δ is the following: $\pi(\top) = 1$, $\pi(u_l) = \lambda_l$ if literal l is chosen for some decision node, $\pi(u_l) = 0$ otherwise.

The set of simple lotteries equivalent to contradictory strategies is included in:
$\mathcal{L}_{NC} = \{L : \pi_L(u_\top) = 1, \forall l \in L, \pi_L(u_l) \in \{0, \lambda_l\}$ and $\min(\pi_L(u_l)), \pi_L(u_{\neg l}) = 0\}$.

The set of simple lotteries equivalent to contradictory strategies is included in:
$\mathcal{L}_C = \{L : \pi_L(u_\top) = 1, \forall l \in L, \pi_L(u_l) \in \{0, \lambda_l\}, \exists l \in L$ s.t. $\min(\pi_L(u_l), \pi_L(u_{\neg l})) \neq 0\}$.

The principle of the proof is to set the values of the λ_l's and the u_l's in such a way that the Choquet value of the worst of the non contradictory lotteries is greater than the Choquet value of the best contradictory lottery.

To this extend, we choose an $\epsilon \in [0, 1]$ such that $\epsilon^n <$

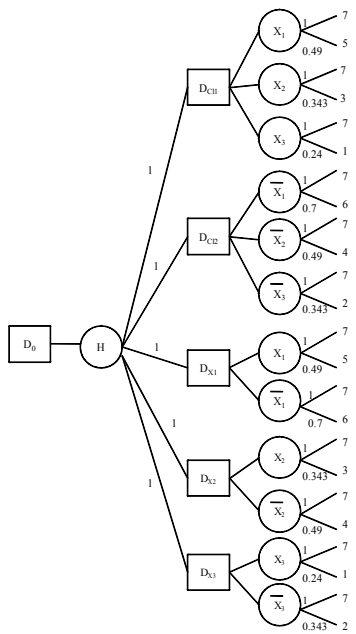

Figure 2: Transformation of the CNF $((x_1 \vee x_2 \vee x_3) \wedge (\neg x_1 \vee \neg x_2 \vee \neg x_3))$ with $\epsilon = 0.7$ ($\lambda(\neg x_1) = 0.7$, $\lambda(x_1) = \lambda(\neg x_2) = 0.49$, $\lambda(x_2) = \lambda(\neg x_3) = 0.343$, $\lambda(x_3) = 0.24$ and $u_\top = 7$, $u(\neg x_1) = 6$, $u(x_1) = 5$, $u(\neg x_2) = 4$,$u(x_2) = 3$, $u(\neg x_3) = 2$, $u(x_3) = 1$).

1/2. Then we set $\lambda_{x_i} = \epsilon^{i+1}$, $u_{x_i} = 2(n-i)+1$, $\lambda_{\neg x_i} = \epsilon^i$, $u_{\neg x_i} = 2(n-i)+2$, $u_\top = 2n+1$.

It holds that:

- The worst non contradictory lottery in $\mathcal{L}_{NC}$ (i.e. the one having the lowest Ch_N value), denoted by $L^{\downarrow}_{NC}$ is such as all the positive literals are possible and the possibility of any negative literal is equal to 0 i.e.

  $$L^{\downarrow}_{NC} = \langle \lambda_{x_n}/u_{x_n}, \ldots, \lambda_{x_1}/u_{x_1}, 1/u_\top \rangle$$

  (for the sake of simplicity we omitted terms where possibility degrees are equal to 0). This holds since according to the proposed codification, utilities of positive literal are always lower than their negative version ($u_{x_i} = 2(n-i)+1 < u_{\neg x_i} = 2(n-i)+2$).

- The best contradictory lottery in $\mathcal{L}_C$ (i.e. the one having the greatest Ch_N value), denoted by $L^{\uparrow}_{C}$ is such as all negative literals are possible and the possibility of any positive literal is equal to 0 except for x_1 (i.e. the one having the greatest utility value within all positive literals) i.e.

  $$L^{\uparrow}_{C} = \langle \lambda_{\neg x_n}/u_{\neg x_n}, \ldots, \lambda_{x_1}/u_{x_1}, \lambda_{\neg x_1}/u_{\neg x_1}, 1/u_\top \rangle$$

  (terms with 0 degrees are omitted). This holds since (i) according to the proposed codification, utilities of negative literal are always greater than their positive version ($u_{x_i} = 2(n-i)+1 < u_{\neg x_i} = 2(n-i)+2$), moreover the presence of x_1 and $\neg x_1$ causes the contradiction (we choose x_1 since u_{x_1} is the greatest utility value within all positive literals) and (ii) the less the number of utilities in the lottery receiving a non negative possibility degree, the greater the Choquet value (Proposition 2).

Considering $L^{\downarrow}_{NC}$, the utilities that receive a positive degree of possibility are, by increasing order: $u_{x_n} < u_{x_{n-1}} < \cdots < u_{x_1} < u_\top$ (all the $\neg x_i$, receive a possibility degree equal to 0). Hence:

$$\begin{aligned}
&Ch_N(L^{\downarrow}_{NC}) \\
&= u_{x_n} \\
&\quad +(u_{x_{n-1}} - u_{x_n})(1-\lambda_{x_n}) \\
&\quad +(u_{x_{n-2}} - u_{x_{n-1}})(1-max(\lambda_{x_n}, \lambda_{x_{n-1}})) \\
&\quad +\ldots \\
&\quad +(u_{x_1} - u_{x_2})(1-max(\lambda_{x_n}, \ldots, \lambda_{x_2})) \\
&\quad +(u_\top - u_{x_1})(1-max(\lambda_{x_n}, \ldots, , \lambda_{x_2}, \lambda_{x_1})) \\
&= 1 + 2(1-\lambda_{x_n}) + 2(1-\lambda_{x_{n-1}}) + \cdots + 2(1-\lambda_{x_1}) \\
&= 2n+1-2(\lambda_{x_n} + \cdots + \lambda_{x_1})
\end{aligned}$$

Considering $L^{\uparrow}_{C}$, the utilities that receive a positive degree of possibility are, by increasing order: $u_{\neg x_n} < u_{\neg x_{n-1}} < \cdots < u_{\neg x_2} < u_{x_1} < u_{\neg x_1} < u_\top$ (all the x_i, $i > 1$ receive a possibility degree equal to 0). Hence:

$$\begin{aligned}
&Ch_N(L^{\uparrow}_{C}) \\
&= u_{\neg x_n} \\
&\quad +(u_{\neg x_{n-1}} - u_{\neg x_n})(1-\lambda_{\neg x_n}) \\
&\quad +(u_{\neg x_{n-2}} - u_{\neg x_{n-1}})(1-max(\lambda_{\neg x_n}, \lambda_{\neg x_{n-1}})) \\
&\quad +\ldots \\
&\quad +(u_{\neg x_2} - u_{\neg x_3})(1-max(\lambda_{\neg x_n}, \ldots, \lambda_{\neg x_3})) \\
&\quad +(u_{x_1} - u_{\neg x_2})(1-max(\lambda_{\neg x_n}, \ldots, \lambda_{\neg x_2})) \\
&\quad +(u_{\neg x_1} - u_{x_1})(1-max(\lambda_{\neg x_n}, \ldots, \lambda_{\neg x_2}, \lambda_{x_1})) \\
&\quad +(u_\top - u_{\neg x_1})(1-max(\lambda_{\neg x_n}, \ldots, \lambda_{\neg x_2}, \lambda_{x_1}, \lambda_{\neg x_1})) \\
&= 2 \\
&\quad +2(1-\lambda_{\neg x_n}) \\
&\quad +2(1-\lambda_{\neg x_{n-1}}) \\
&\quad +\ldots \\
&\quad +2(1-\lambda_{\neg x_3}) \\
&\quad +(1-\lambda_{\neg x_2}) \\
&\quad +(1-\lambda_{x_1}) \\
&\quad +(1-\lambda_{\neg x_1}) \\
&= 2 \\
&\quad +2(1-\lambda_{\neg x_n}) \\
&\quad +2(1-\lambda_{\neg x_{n-1}}) \\
&\quad +\ldots \\
&\quad +(1-\lambda_{\neg x_2}) \\
&\quad +(1-\lambda_{\neg x_2})(\text{ since by definition } \lambda_{x_1}) = \lambda_{\neg x_2})) \\
&\quad +(1-\lambda_{\neg x_1})
\end{aligned}$$

$$
\begin{aligned}
&= 2(1-\lambda_{\neg x_n}) \\
&\quad +2(1-\lambda_{\neg x_{n-1}}) \\
&\quad +\dots \\
&\quad +2(1-\lambda_{\neg x_2}) \\
&\quad +(1-\lambda_{\neg x_1}) \\
&= 2+2(n-1)-2(\lambda_{\neg x_n}+\dots+\lambda_{\neg x_2})+1-\lambda_{\neg x_1} \\
&= 2n+1-2(\lambda_{\neg x_n}+\dots+\lambda_{\neg x_2})-\lambda_{\neg x_1}
\end{aligned}
$$

It follows that

$$
\begin{aligned}
&Ch_N(L^{\downarrow}_{NC})-Ch_N(L^{\uparrow}_{C}) \\
&= 2n+1-2(\lambda_{x_n},\dots,\lambda_{x_1}) \\
&= -2n-1+2(\lambda_{\neg x_n},\dots,\lambda_{\neg x_2})+\lambda_{\neg x_1} \\
&= 2(\lambda_{\neg x_n},\dots,\lambda_{\neg x_2})+\lambda_{\neg x_1}-2(\lambda_{x_n},\dots,\lambda_{x_1}) \\
&= \lambda_{\neg x_1}-2\lambda_{x_n}(\text{ since by definition } \lambda_{\neg x_i}=\lambda_{x_{i-1}})
\end{aligned}
$$

Recall that by contruction $\lambda_{\neg x_1}=\epsilon$ and $\lambda_{x_n}=\epsilon^{n+1}$: $Ch_N(L^{\downarrow}_{NC})-Ch_N(L^{\uparrow}_{C})$ is equal to $\epsilon-2\epsilon^{n+1}$. Since we have chosen ϵ in $[0,1]$ is such a way that $\epsilon^n<1/2$, we get $Ch_N(L^{\downarrow}_{NC})-Ch_N(L^{\uparrow}_{C})>0$. This shows that $Ch_N(L^{\downarrow}_{NC})>Ch_N(L^{\uparrow}_{C})$.

Hence the Choquet value of any non contradictory strategy, if such a strategy exists, is greater than $Ch_N(L^{\uparrow}_{C})$. Moreover, the CNF is consistent iff there exists a non contradictory strategy. This means that, it is consistent iff there exist a strategy with a Choquet value greater than $\alpha=Ch_N(L^{\uparrow}_{C})$.

NP-Hardness of $DT-OPT-Ch_{\Pi}$

The hardness of the problem is obtained, as is the proof of $DT-OPT-Ch_N$, by a reduction from 3-SAT.

Thus, given a CNF with $Cl=\{Cl_1,\dots,Cl_m\}$ and $X=\{X_1,\dots,X_n\}$, a possibilistic decision tree is built with a root node D_0 having as unique child a chance node that branches on n decision nodes $D_i(i=1..n)$ (with a possibility degree equal to 1 for each). Each D_i will make a decision on the value of X_i: it has two children, C_{x_i} and $C_{\neg x_i}$, which are chance node. Consider any $l\in\{x_1,\dots,x_n,\neg x_1,\dots,\neg x_n\}$ and the corresponding chance nodes C_l. For the purpose of normalization of the possibility distribution, C_l is linked with a possibility degree equal to 1, to a leave labeled by utility 0. In addition, for any Cl_i satisfied by l, a leave node labeled by Cl_i is added as a child of C_l.

To assign possibility degrees we use a constant $0<\epsilon<1$ implying that $\forall i\in\{1..m\}$, $\epsilon^i<1$ and $i<j$ iff $\epsilon^i>\epsilon^j$. Thus for each leave node Cl_i, we assign a possibility degree equal to ϵ^i and a utility degree equal to $\Sigma_{k=0}^{i-1}10^k$. More precisely, for Cl_1 (resp. Cl_2, Cl_3,…,Cl_m) the associated utility is 1 (resp. 11, 111,…, $\underbrace{1..1}_{m\ terms}$)).

The hardness of $DT-OPT-Ch_{\Pi}$ is proved by the following reduction from 3-SAT (see Algorithm 5).Consider a 3 CNF, $Cl=\{Cl_1,\dots,Cl_m\}$ on a the set

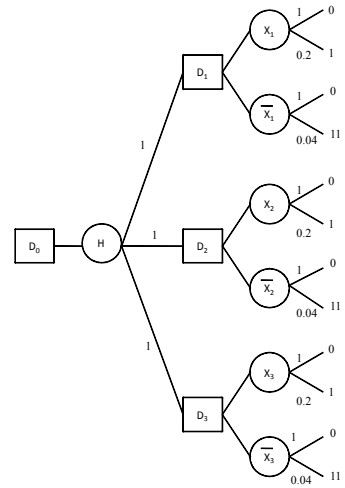

Figure 3: Transformation of the CNF $((x_1\vee x_2\vee x_3)\wedge(\neg x_1\vee\neg x_2\vee\neg x_3))$ with $\epsilon=0.2$.

$X=\{x_1,\dots,x_n\}$ of propositional variables. In the following, we will use a constant $0<\epsilon<1$. Obviously, $\epsilon^i<1, i=1,m$ and $i<jm$ implies $\epsilon^i>\epsilon^j$.

A possibilistic decision tree is built with a root node D_0 having as unique child a chance node that branches on n decision nodes $D_i, i=1\dots n$ (with a possibility degree equal to 1 for each). Each D_i must makes a decision on the value on X_i: it has two children, C_{x_i} and $C_{\neg x_i}$, which are chance node. Consider any literal $l\in\{x_1,\dots,x_n,\neg x_1,\dots,\neg x_n\}$ and the corresponding chance node C_l For the purpose of normalization of the possibility distribution, C_l is linked, with a possibility degree equal to 1, to a leave labeled with utility 0. In addition, for any Cl_i in Cl satisfied by l, a leave node labeled by Cl_i is added as a child of C_l, with a possibility degree equal to ϵ^i and a utility degree equal $\Sigma_{k=0}^{i-1}10^k$. For Cl_1 (resp. Cl_2, Cl_3,…,Cl_m) the associated utility is 1 (resp. 11, 111,…, $\underbrace{1..1}_{m\ terms}$)).

Figure 3 gives an example of this transformation procedure.

One can check that:

- The reduction is performed in $O(n+m)$.
- There is a bijection between the interpretation of the CNF and the admissible strategies.
- Ch_{Π} value of a strategy δ is equal to $\sum_{i=1,m,\delta\text{ satisfies }Cl_i}10^{i-1}*\epsilon^i$.

The greater the number of clauses satisfied by a strategy, the greater its Ch_{Π} value. Hence the CNF is consistent iff there exist a strategy with a Choquet value

(greater or) equal to $\sum_{i=1..m} 10^{i-1} * \epsilon^i$ i.e. which satisfies all clauses.

Algorithm 5: Possibility-based transformation

Data: 3-SAT problem
Result: Possibilistic decision tree $\Pi\mathcal{T}$
begin
  Fix ϵ such that $0 < \epsilon < 1$
  Create a decision node D_0 as the root of $\Pi\mathcal{T}$
  Create a chance node H as the unique Child of D_0
  foreach $X_i \in X$ **do**
    Create a decision node D_{X_i}
    Add a chance node C_{x_i} as a child of D_{X_i}
    Associate to C_{x_i} the lottery $\langle 1/0 \rangle$
    Add a chance node $C_{\neg x_i}$ as a child of D_{X_i}
    Associate to $C_{\neg x_i}$ the lottery $\langle 1/0 \rangle$
  foreach $Cl_i \in Cl$ **do**
    foreach *literal* $l_j \in Cl_i$ **do**
      Associate to C_{l_j} the lottery $< \epsilon^i / \Sigma_{k=0}^{i-1} 10^k >$
  return $\Pi\mathcal{T}$
end

□

Proof of Proposition 8.

Consider any tree L, L' and $L"$ be 3 kappa lotteries. We can suppose without loss of generality that they are in reduced form, i.e. that:
$L = \langle \kappa_1/\mu_1, \ldots, \kappa_n/\mu_n \rangle$,
$L' = \langle \kappa'_1/\mu_1, \ldots, \kappa'_n/\mu_n \rangle$
$L" = \langle \kappa_1"/\mu_1, \ldots, \kappa_n"/\mu_n \rangle$

It holds that:
$OMEU(L) = \min_{i=1,n}\{\kappa_i + u_i\}$ and
$OMEU(L') = \min_{i=1,n}\{\kappa'_i + u_i\}$

Let $L_1 = Reduction(\alpha \wedge L \vee \beta \wedge L")$. According to the reduction definition, the kappa ranking of utility degree $u_k \in U$ from L' is equal to:
$\kappa_k = \min((\alpha + \kappa_k), (\beta + \kappa_k"))$.

Thus:
$OMEU(L_1) = \min_{i=1..n} min[(\kappa_i + \alpha), (\kappa_i" + \beta)] + u_i$.

Similarly, let $L_2 = Reduction(\alpha \wedge L' \vee \beta \wedge L")$.

It holds that:
$OMEU(L_2) = min_{i=1..n} min[(\kappa'_i + \alpha), (\kappa_i" + \beta)] + u_i$.

Suppose that $L \geq_{OMEU} L'$, i.e. that:
$\underset{i=1..n}{min}\{\kappa_i + u_i\} \leq \underset{i=1..n}{min}\{\kappa'_i + u_i\}$.

Then $\underset{i=1..n}{min}\{\kappa_i + u_i\} + \alpha \leq \underset{i=1..n}{min}\{\kappa'_i + u_i\} + \alpha$.
Then $\underset{i=1..n}{min}\{\kappa_i + u_i + \alpha\} \leq \underset{i=1..n}{min}\{\kappa'_i + u_i + \alpha\}$.
As a consequence, we get:
$\min(\underset{i=1..n}{min}\{\kappa_i" + u_i + \beta\}, \underset{i=1..n}{min}\{\kappa_i + u_i + \alpha\}) \leq \min(\underset{i=1..n}{min}\{\kappa_i" + u_i + \beta\}, \underset{i=1..n}{min}\{\kappa'_i + u_i + \alpha\})$.

By associativity of the min operation, we get:
$\underset{i=1..n}{min} \min(\{\kappa_i" + u_i + \beta\}, \{\kappa_i + u_i + \alpha\}) \leq \underset{i=1..n}{min} \min(\{\kappa_i" + u_i + \beta\}, \{\kappa'_i + u_i + \alpha\})$

Hence: $\underset{i=1..n}{min}\, min[(\kappa_i + \alpha), (\kappa_i" + \beta)] + u_i \leq \underset{i=1..n}{min}\, min[(\kappa'_i + \alpha), (\kappa_i" + \beta)] + u_i$,

That is to say that $OMEU(L_1) \leq OMEU(L_2)$.

We have shown that $L \geq_{OMEU} L'$ implies $Reduction(\alpha \wedge L \vee \beta \wedge L") \geq_{OMEU} Reduction(\alpha \wedge L' \vee \beta \wedge L")$.
Thus $L \geq_{OMEU} L'$ implies
$\alpha \wedge L \vee \beta \wedge L" \geq_{OMEU} \alpha \wedge L' \vee \beta \wedge L"$.

□